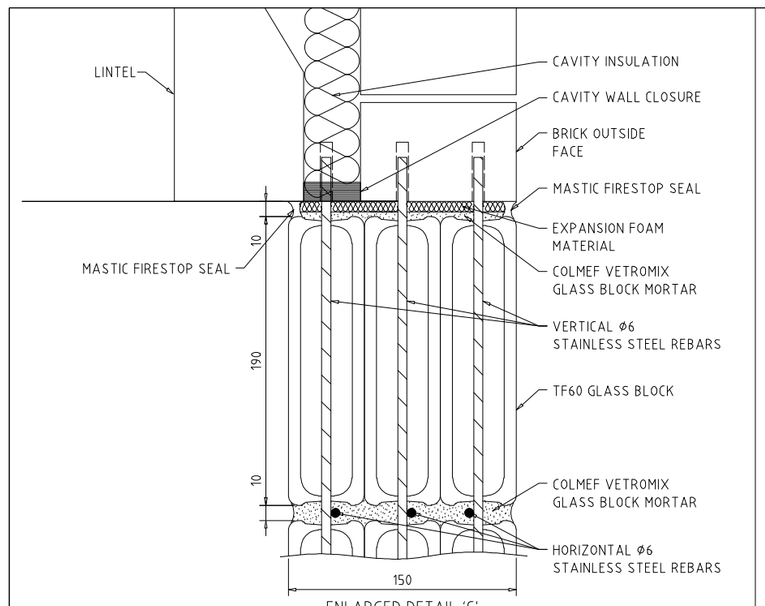

ENLARGED DETAIL 'C'

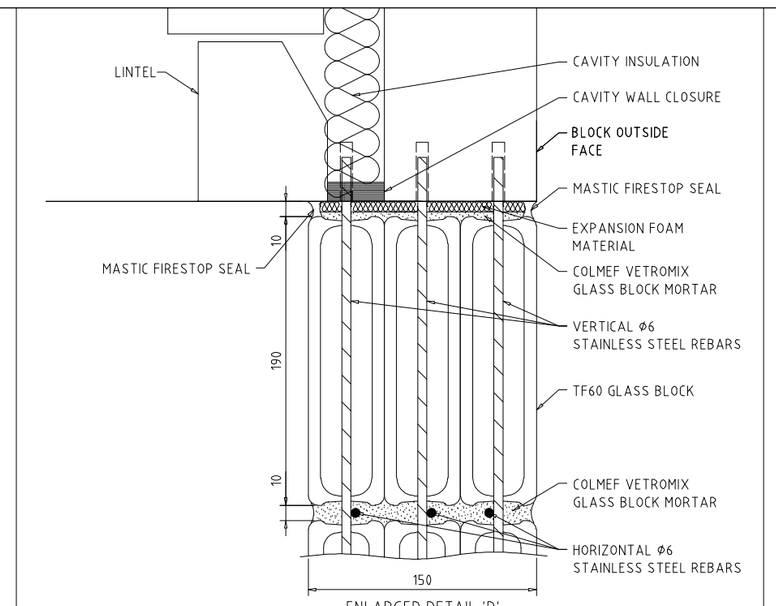

ENLARGED DETAIL 'D'

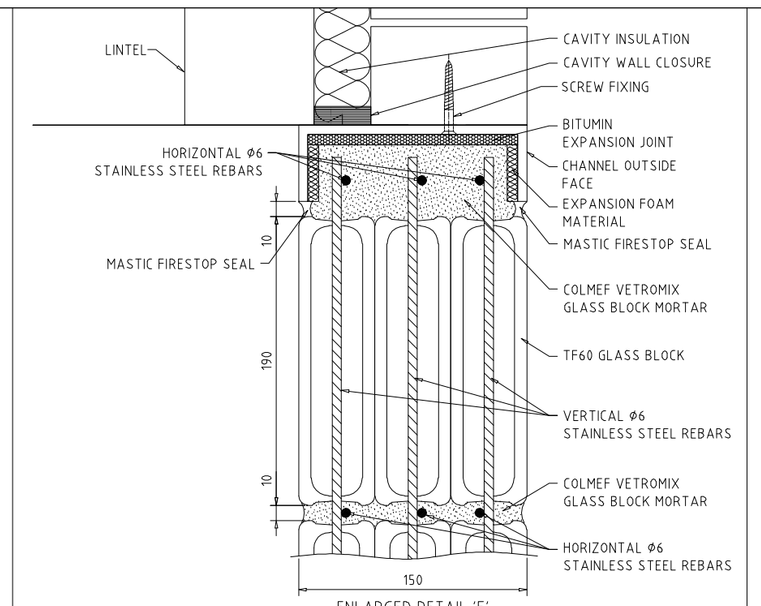

ENLARGED DETAIL 'E'

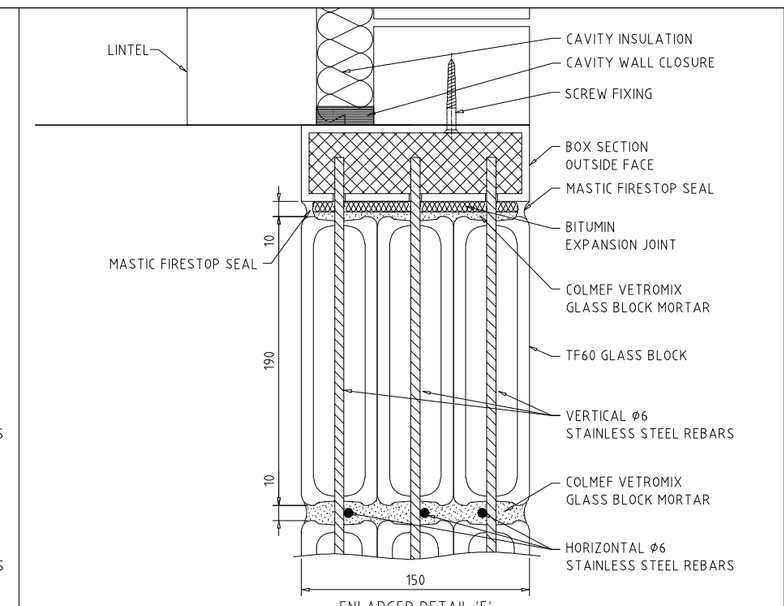

ENLARGED DETAIL 'F'

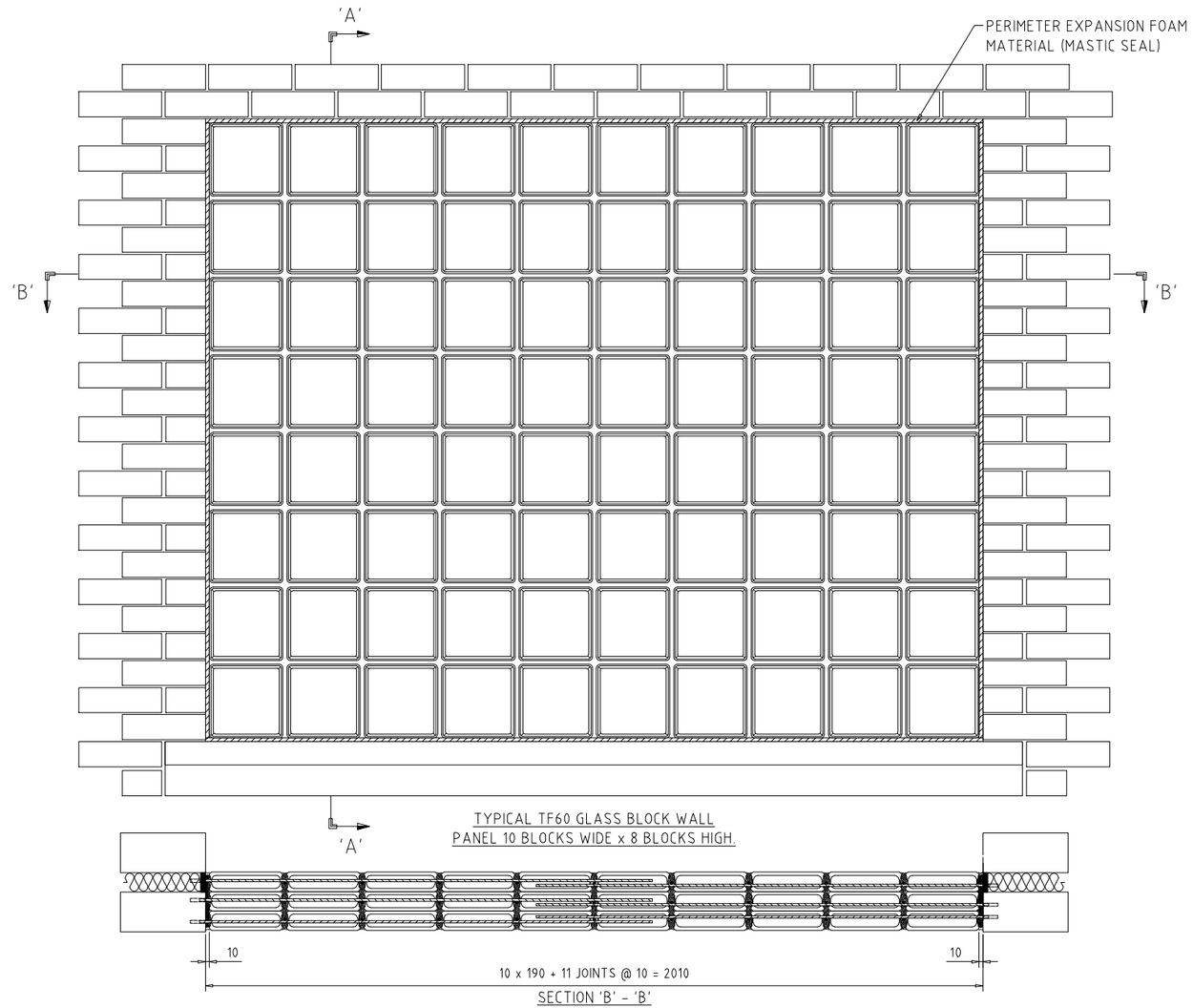

SECTION 'B' – 'B'

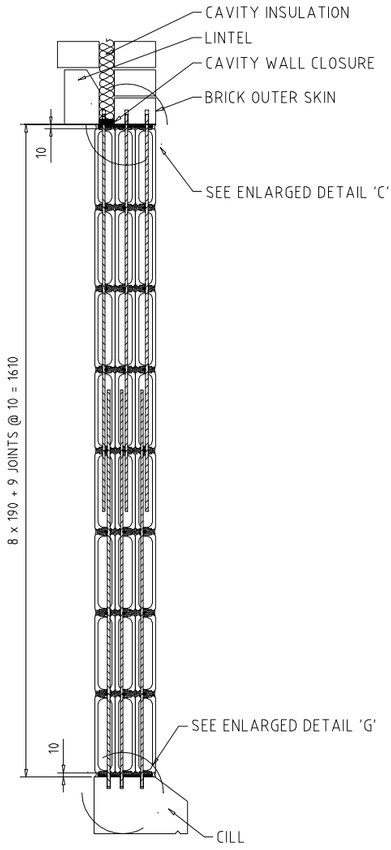

SECTION 'A' – 'A'

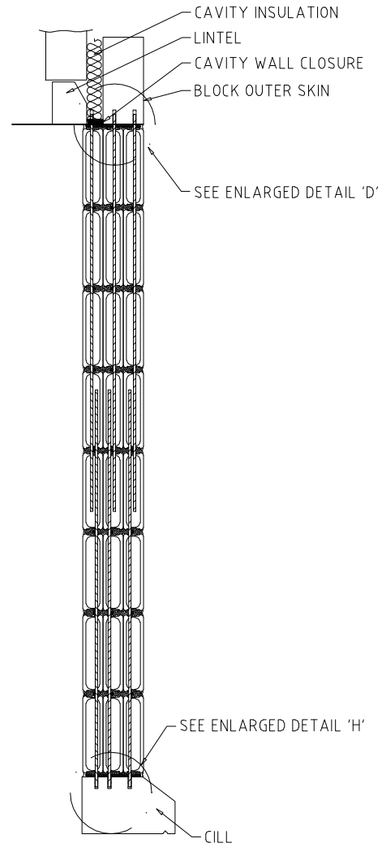

SECTION 'A' – 'A'

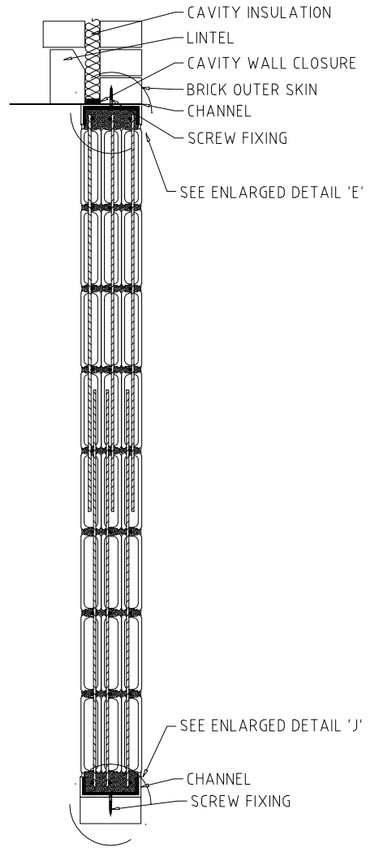

SECTION 'A' – 'A'

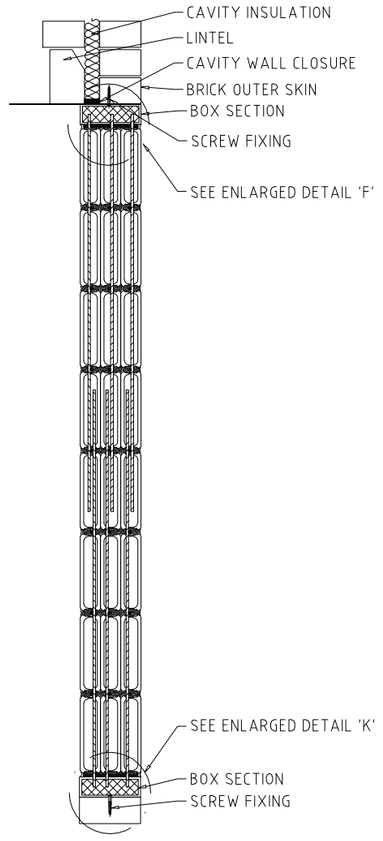

SECTION 'A' – 'A'

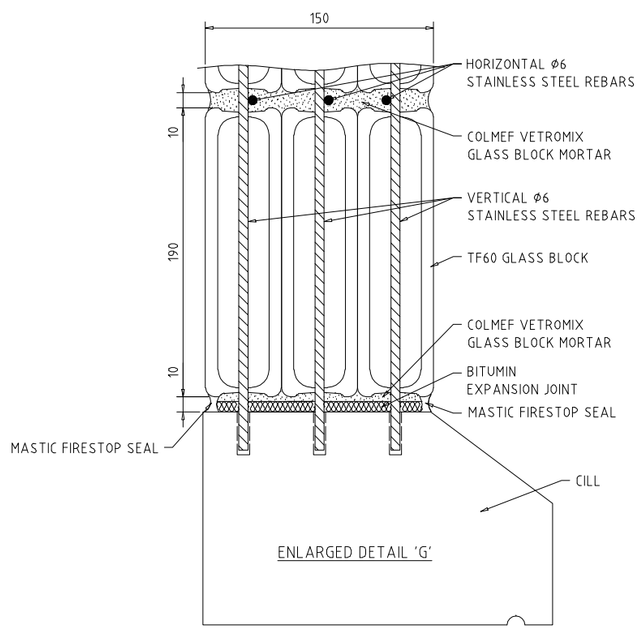

ENLARGED DETAIL 'G'

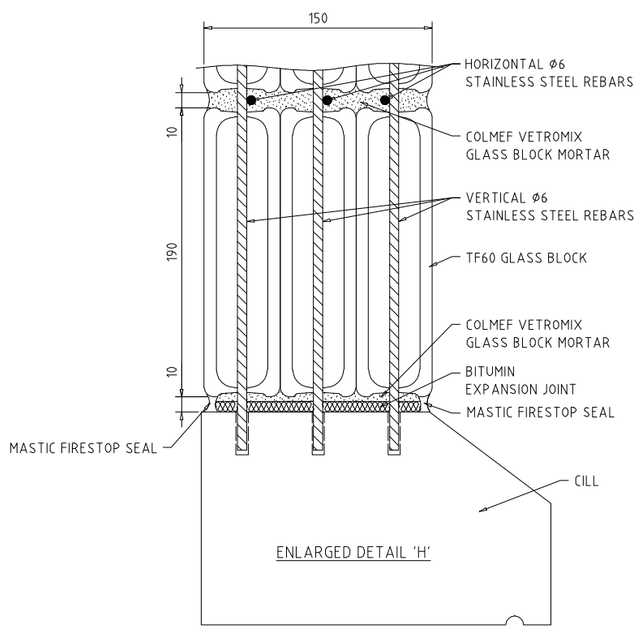

ENLARGED DETAIL 'H'

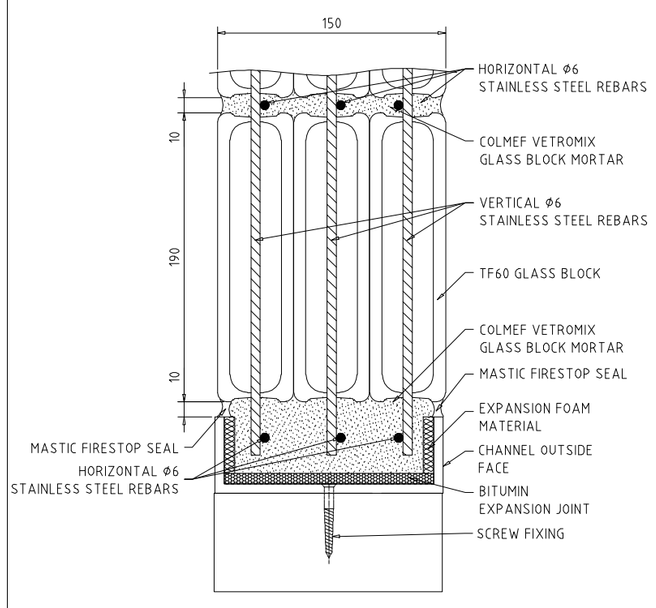

ENLARGED DETAIL 'J'

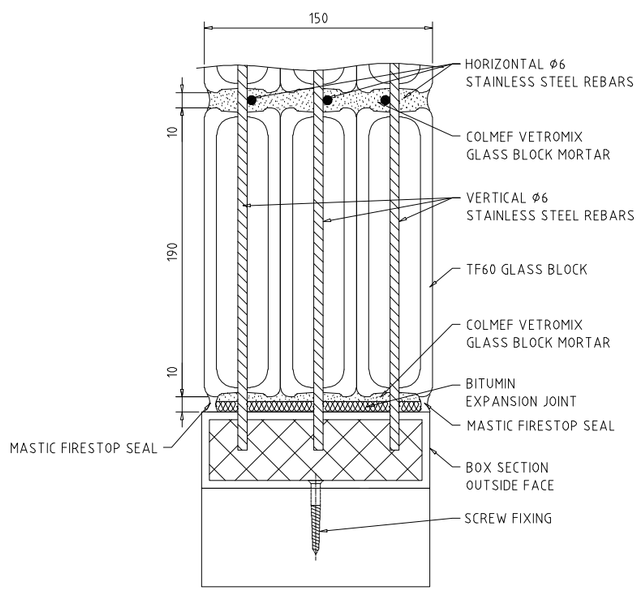

ENLARGED DETAIL 'K'

Guide to Specifying Glass Blocks – General considerations:

1. Glass block walls are self supporting, but not load bearing. In addition to their own weight, they can withstand wind loads, horizontal live loads and impact loads. A lintel provides the head for the panel to be anchored into whilst ensuring no downward pressure is placed on the glass blocks.

2. Openings must be square and perpendicular and the opening dimensions must be designed to suit glass block modules. Glass blocks cannot be cut like masonary bricks or tiles. To calculate the minimum opening size based on using 190 x 190 x 80mm blocks with 10mm joints, multiply the number of blocks by 200mm (190 block + 10mm joint) then add 10mm for the other mortar joint. This is the minimum opening requirement. 10mm mortar joints are the most commonly used. 6mm spacers can also be used for thinner joints, if openings have been prepared incorrectly or if retro installing glass blocks, or to create a tighter radii, when building a curved glass block panel.

3. Glass block walls are connected to the surround by reinforcement bars being inserted into pre-drilled holes (or panel anchors). For best integral strength, panels should be installed into a four sided pre-prepared opening. The opening can be timber, brick, steel, concrete or block-work.

4. Between the opening and glass blocks it is essential to incorporate expansion joints to the perimeter to allow the panel to expand and contract freely with temperature change. The foam must not be bridged by mortar (render/plaster etc.) and caulked with Rods & Mortar expansion joint sealer (fire-retardent in fire-rated applications).

5. Glass blocks should not be installed when the surrounding temperature is 5°C and falling or 30°C and rising.

6. Using standard glass blocks the maximum panel size without intermediate support or slip joints is 25m², with no dimension exceeding 6m in either direction. For TF30 and TF60 fire blocks, the maximum panel size permissable is 9m² (in line with test specification).

Connection details are purely representative to demonstrate the principals how glass blocks can be constructed with U channels, or box sections, either for structural and practical purposes, i.e. interface of glass blocks and render or aesthetical use.

The channel, PFC and box section dimensions are illustrative only and not necessarily to scale.

Connection detail principles, should be designed and be specific to each project requirement and calculations checked and qualified by independant structural engineers.

Accessories – Perimeter expansion joints.

Glass blocks will expand and contract by 0.25mm per 25°C temperature change. Soft expansion joints must be incorporated into the perimeter between the substrate opening and block, being caulked with a white silicone (or fire-stop mastic). This will visually look similar to a standard mortar joint. For the head and jambs of an opening, 10mm thick foam is used. This is a white expansion fibre. The horizontal expansion joint between the first row of glass blocks and the base of the opening is formed using high-density bitumen or neoprene material to support the weight of the panel. Alternatively two coats of bitume emulsion can be applied as the barrier between the bottom course mortar joint and base of opening.

Joint sizes and spacer pegs.

10mm is the most common joint size for specifying and building glass blocks. A 190 x 190 block plus 10mm spacer modulates to 200mm. Spacer pegs serve multiple functions: They prevent mortar squeeze, increasing the number of courses that can be constructed in a day. They prevent stainless steel reinforcement bars coming into direct contact with the glass block as metal and glass have different expansion and contraction properties. When a spacer peg is fitted and the wall is finished, the tabs at he end twist off and can then be grouted over.

Other spacers are available for the 80mm-thick blocks-6mm x 6mm and 6mm x 10mm and also for 180mm-thick blocks - 10mm x 10mm.

Panel reinforcement and tying back to the perimeter opening.

Stainless steel ribbed reinforcement bars are used to tie to the opening. The rods penetrate the expansion material and anchor the panel in place by connecting to the perimeter frame. This can be loacted by drilling an over sized hole a minimum depth of 25-35mm an should be filled withsilicone to cushion any movement of the re-bar. Rods are 1200mm long and when the panel is larger than the reinforcement bar, rods are overlapped by a minimum of 150mm and are loosely joined using tie wire/cable tie.

One reinforcement bar should be used in each horizontal and vertical joint as a minimum. More rods may be required if using end glass blocks or a TF30 or TF60.

For situations where connecting the rods to the opening may prove difficult, panel anchors can be used (similar to the brick-tie principle secured by either screw or bolt fixing or can mechanically shot fired).

Glass blocks specilists mortar – Colmef Vetromix

Colmef Vetromix is a specifically designed and formulated premix mortar for glass block constructionit ensures accuracy and consistency of performance. It can be used internally, externally, straight, curved and fire-rated glass block walling. Vetromix has a fine texture, low slump and the whitest mortar available. It is used as bedding and pointing mix, therefore there are no banding issues between building and grouting. Mixing instructions are on the reverse of each bag and should be strictly adhered to, 10 kilos will build approximately twelve 190 x 190 x 80 blocks. The surrounding temperature should not be 5°C and falling or 30°C and rising and the joint width should not exceed 22mm.

Expansion joint sealer sealant.

After construction, the perimeter joint should be cleared of any residue mortar and caulked with Rods & Mortar expansion sealant (or fire stop mastic). Bridging the joint would restrict flexibility and movement and negate the expansion fibre and can cause glass blocks or joints to crack.

How a mortar joint works

Glass Block Technology mortar is a specially formulated premix bedding and finishing compound, available in one bag to be mixed with water. It is manufactured under factory controlled conditions so all additives are accurately blended and designed for maximum performance of strength, flexibility, water repellence and U-value. A mortar joint will cure in reaction to air just like normal mortars, so if is important that the joint size is not below 6mm. This guarantees total curing and maximum strength. Vetromix will become solid within hours of construction. Total curing is achieved after 21-28 days.

Glass is impervious unlike brick and concrete, therefore mortar is not absorbed into a glass block. The strength and support of a joint is created by the shape of the mortar profile (oval). The edge or collar of a block is concaved so when two are laid next to each other an oval joint is created. This oval joint enables the glass block wall to resist impact or applied loads resulting in the panel being stable and self-supporting, but not load bearing. Stainless steel reinforcement bars are used to restrain the panel to the surrounding aperature, whilst also giving the panel integral support and a wind-loading value. The minimum recommended joint is 6mm and the most common used is 10mm. However, this is only the distance on show; the centre of the oval joint is always deeper from collar to collar. This area houses the stainless reinforcement bars, which should never be in direct contact with the glass surface.

GLASSBLOCK TECHNOLOGY

170 Lodge Lane, Hyde, Cheshire SK14 4LB
projects@glassblocks.co.uk
www.glassblocks.co.uk
twitter:@glassblocks
Tel: 0161 612 6893
Fax: 0161 285 1503

The data sheet connection detail & construction principles, should be designed and be specific to each project requirement or environment & calculations checked and qualified by independant structural engineers.

All information is accurate to the best of our knowledge at time of data sheet production, however Glass Block Technology Ltd. cannot be held liable in any way regarding the usage of glass blocks and the manner in which they are installed. Glass Block Technology Ltd. reserve the right to amend or correct changes at any time.

TYPICAL TF60 GLASS BLOCK RODS & MORTAR SYSTEM

GBT102 TF60 Rev.

Scale 1:7.5 & 1 : 2