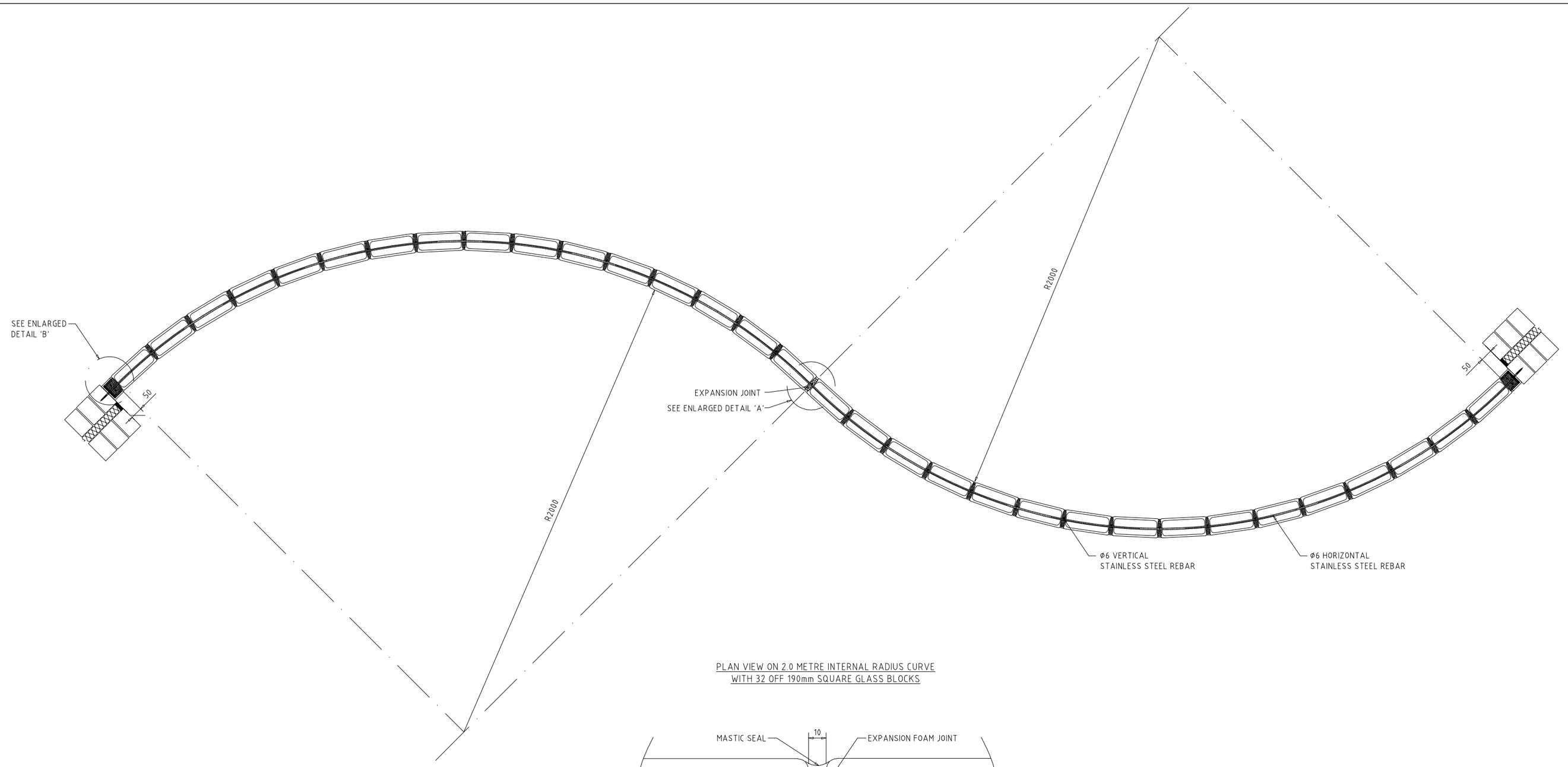

PLAN VIEW ON 2.0 METRE INTERNAL RADIUS CURVE
WITH 32 OFF 190mm SQUARE GLASS BLOCKS

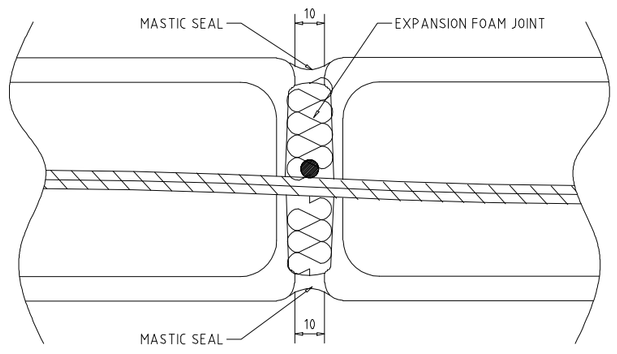

ENLARGED DETAIL 'A'

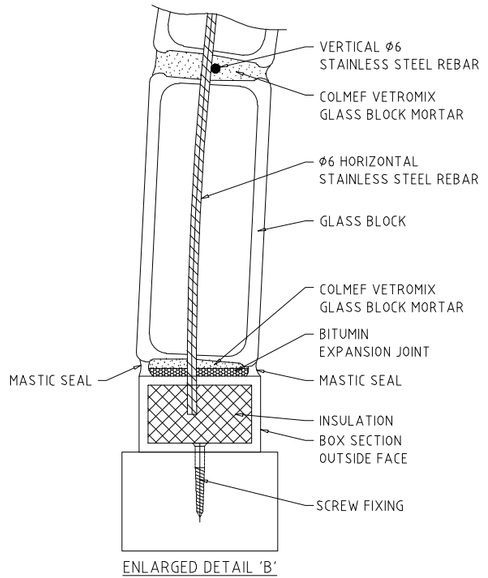

ENLARGED DETAIL 'B'

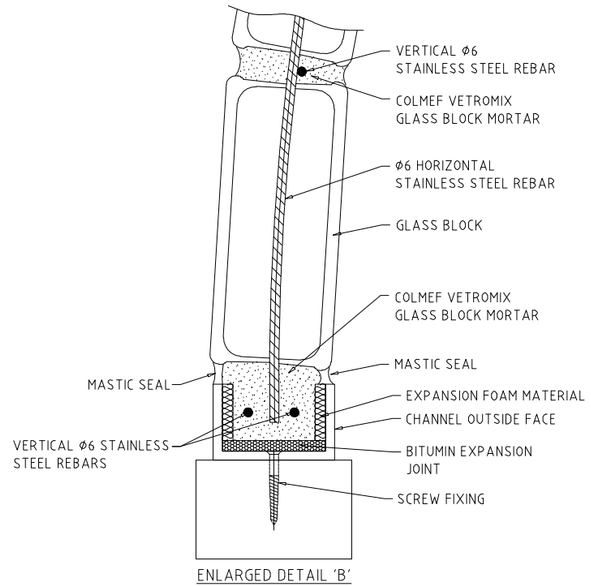

ENLARGED DETAIL 'B'

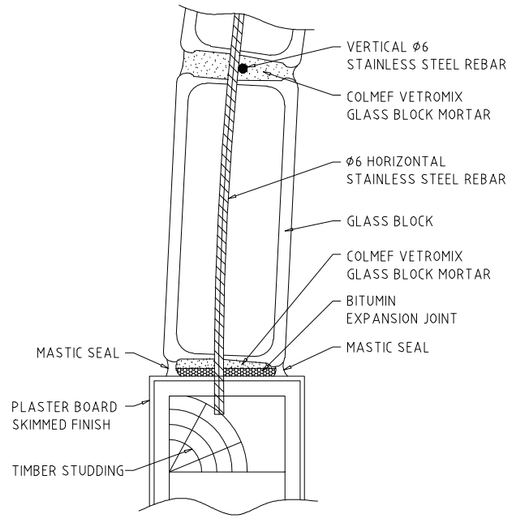

ENLARGED DETAIL 'B'

Guide to Specifying Glass Blocks – General considerations:

1. Glass block walls are self supporting, but not load bearing. In addition to their own weight, they can withstand wind loads, horizontal live loads and impact loads. A lintel provides the head for the panel to be anchored into whilst ensuring no downward pressure is placed on the glass blocks.

2. Openings must be square and perpendicular and the opening dimensions must be designed to suit glass block modules. Glass blocks cannot be cut like masonary bricks or tiles. To calculate the minimum opening size based on using 190 x 190 x 80mm blocks with 10mm joints, multiply the number of blocks by 200mm (190 block + 10mm joint) then add 10mm for the other mortar joint. This is the minimum opening requirement. 10mm mortar joints are the most commonly used. 6mm spacers can also be used for thinner joints, if openings have been prepared incorrectly or if retro installing glass blocks, or to create a tighter radii, when building a curved glass block panel.

3. Glass block walls are connected to the surround by reinforcement bars being inserted into pre-drilled holes (or panel anchors). For best integral strength, panels should be installed into a four sided pre-prepared opening. The opening can be timber, brick, steel, concrete or block-work.

4. Between the opening and glass blocks it is essential to incorporate expansion joints to the perimeter to allow the panel to expand and contract freely with temperature change. The foam must not br bridged by mortar (render/plaster etc..) and caulked with Rods & Mortar expansion joint sealer (fire-retardent in fire-rated applications).

5. Glass blocks should not be installed when the surrounding temperature is 5°C and falling or 30°C and rising.

6. Using standard glass blocks the maximum panel size without intermediate support or slip joints is 25m^2, with no dimension exceeding 6m in either direction. For TF30 and TF60 fire blocks, the maximum panel size permissable is 9m^2 (in line with test specification).

Connection details are purely representative to demonstrate the principals how glass blocks can be constructed with U channels, or box sections, either for structural and practical purposes, i.e. interface of glass blocks and render or aesthetical use.

The channel, PFC and box section dimensions are illustrative only and not necessarily to scale.

Connection detail principles, should be designed and be specific to each project requirement and calculations checked and qualified by independant structural engineers.

Accessories – Perimeter expansion joints.

Glass blocks will expand and contract by 0.25mm per 25°C temperature change. Soft expansion joints must be incorporated into the perimeter between the substrate opening and block, being caulked with a white silicone (or fire-stop mastic). This will visually look similar to a standard mortar joint. For the head and jambs of an opening, 10mm thick foam is used. This is a white expansion fibre. The horizontal expansion joint between the first row of glass blocks and the base of the opening is formed using high-density bitumen or neoprene material to support the weight of the panel. Alternalively two coats of bitume emulsion can be applied as the barrier between the bottom course mortar joint and base of opening.

Joint sizes and spacer pegs.

10mm is the most common joint size for specifying and building glass blocks. A 190 x 190 block plus 10mm spacer modulates to 200mm. Spacer pegs serve multiple functions: They prevent mortar squeeze, increasing the number of courses that can be constructed in a day. They prevent stainless steel reinforcement bars coming into direct contact with the glass block as metal and glass have different expansion and contraction properties. When a spacer peg is fitted and the wall is finished, the tabs at he end twist off and can then be grouted over.

Other spacers are available for the 80mm-thick blocks-6mm x 6mm and 6mm x 10mm and also for 100mm-thick blocks – 10mm x 10mm.

Panel reinforcement and tying back to the perimeter opening.

Stainless steel ribbed reinforcement bars are used to tie to the opening. The rods penetrate the expansion material and anchor the panel in place by connecting to the perimeter frame. This can be loacted by drilling an over sized hole a minimum depth of 25-35mm an should be filled withsilicone to cushion any movement of the re-bar. Rods are 1200mm long and when the panel is larger than the reinforcement bar, rods are overlapped by a minimum of 150mm and are loosely joined using tie wire/cable tie.

One reinforcement bar should be used in each horizontal and vertical joint as a minimum. More rods may be required if using end glass blocks or a TF30 or TF60.

For situations where connecting the rods to the opening may prove difficult, panel anchors can be used (similar to the brick-tie principle secured by either screw or bolt fixing or can mechanically shot fired).

Glass blocks specilists mortar – Colmef Vetromix

Colmef Vetromix is a specifically designed and formulated premix mortar for glass block construction it ensures accuracy and consistency of performance. It can be used internally, externally, strlaight, curved and fire-rated glass block walling. Vetromix has a fine texture, low slump and the whitest mortar available. It is used as bedding and pointing mix, therefore there are no bonding issues between building and grouting. Mixing instructions are on the reverse of each bag and should be strictly adhered to, 18 klies will build approximately twelve 190 x 190 x 80 blocks. The surrounding temperature should not be 5°C and falling or 30°C and rising and the joint width should not exceed 22mm.

Expansion joint sealer sealant.

After construction, the perimeter joint should be cleared of any residue mortar and caulked with Rods & Mortar expansion sealant (or fire stop mastic). Bridging the joint would restrict flexibility and movement and negate the expansion fibre and can cause glass blocks or joints to crack.

Curved panel joint sizes and minimum radii

When designing or building a curve, the internal radius dimension is one of the first items to consider to ensure the external vertical joint is not too wide and looks aesthetically in proportion with the horizontal joints. Also it is crucial that it does not exceed 22mm, as it may be susceptible to cracking.

The radius is calculated in conjunction with the block dimension, so a smaller radius is possible with a 90 x 190 block in comparison with a 190 x 190 block.

A 6mm spacer used internally will achieve a narrower external vertical joint. This works well in conjunction with smaller format or half blocks, resulting in slimline vertical and horizontal internal and external joints.

Curved panel opening size and restraint

To set out the opening size dimensions for a curved glass block wall panel, the claculation is done in the same manner as a straight panel. However the calculation should be done from the inside face of the curve (shortest radii). The outer width of the curve will be wider because the vertical joint is opened to form a curve (longest radii).

Reinforcement bars are supplied in 1200mm lengths as standard and are flexible enough to be formed to follow the flow of the curve.

GLASSBLOCK TECHNOLOGY

170 Lodge Lane, Hyde, Cheshire SK14 4LB
projects@glassblocks.co.uk
www.glassblocks.co.uk
twitter:@glassblocks
Tel: 0161 612 6893
Fax: 0161 285 1503

The data sheet connection detail & construction principles, should be designed and be specific to each project requirement or environment & calculations checked and qualified by independant structural engineers.

All information is accurate to the best of our knowledge at time of data sheet production, however Glass Block Technology Ltd. cannot be held liable in any way regarding the usage of glass blocks and the manner in which they are installed. Glass Block Technology Ltd. reserve the right to amend or correct changes at any time.

TYPICAL GLASS BLOCK SNAKE RODS & MORTAR SYSTEM

GBT108 Rev.

Scale 1:5 & 1:1